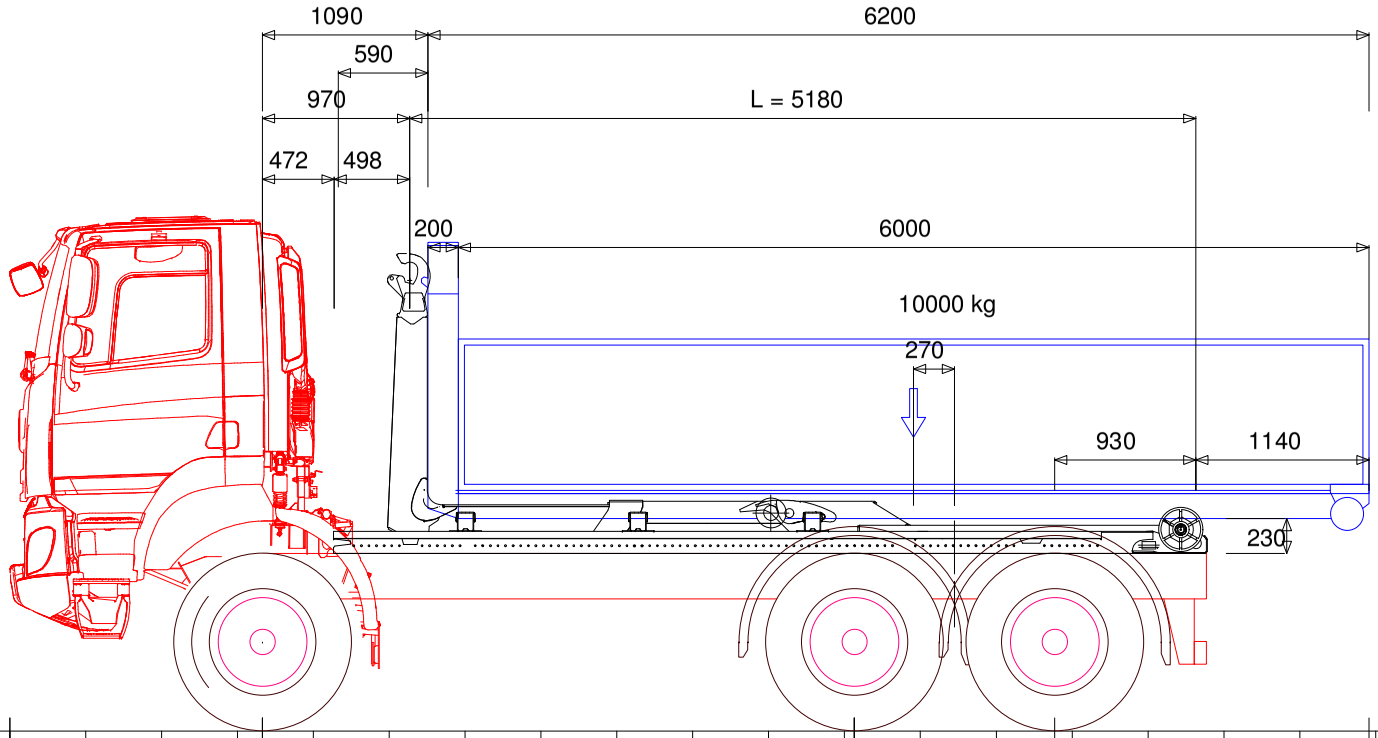

Unloaded	6812 { 54%}	5733 (2867+2867)	= 12545 kg
loaded	7404 { 33%}	15141 (7571+7571)	= 22545 kg
Max	7500	19000 (11500+11500)	= 22545 kg

Techn. 4560 | 2730 =60%

Lifting body situation
3325 kg on front axle | 19220 kg on rear axle

TATRA Phoenix T 158-8P6R33.391 6x6.2 Euro 6 -3900+1320

MULTILIFT XR14S 5100

HYDCO Givati LTD Industrial Area Gan-Yavne 70800